Downloaded from SAE International by Oak Ridge National Laboratory, Wednesday, November 06, 2013 01:44:36 PM

2011-28-0118

Thermomechanical Analysis of the Cylinder Head and Cylinder Block with the Liner of AFV Diesel Engine

N.Venkateswaran, R.Vinobakrishnan and V.Balamurugan
Center for Engineering Analysis and Design, CVRDE,Ministry of Defence

Copyright © 2011 SAE International

ABSTRACT

This paper deals with the Coupled thermo mechanical analysis of a cylinder head, cylinder block and crank case with the liner of an uprated engine. The existing engine develops 780 hp output with mechanical driven supercharger and the engine is uprated to 1000 hp by replacing the supercharger with a turbocharger and new Fuel injection equipment. For uprating any engine, the piston and cylinder head are the most vulnerable members due to increased mechanical and thermal loadings. Mechanical loading is due to the gas pressure in the gas chamber and its magnitude can be judged in terms of peak pressure. Thermal loading is due to temperature and the heat transfer conditions in the piston surface, cylinder liner and the cylinder head. The relative importance of the various loads applied on the head and cylinder block in operation are assessed and a method of predicting their influence on the structural integrity of the components described.

The Cylinder head, cylinder block and crank case of the uprated Engine have been modeled using finite element method and coupled steady state heat transfer cum thermal stress analysis has been done. The present study concentrates on the peak conditions such as peak firing pressure and steady state thermal conditions. This study shows that the cylinder head and cylinder block can withstand the higher stresses due to enhanced pressure and thermal loads in the uprated version of the engine and no further design modifications are necessary. And it is also observed from the successful completion of Endurance and Performance evaluation of this uprated engine in the test bed, as well as in the vehicle.

1.0 INTRODUCTION

The existing Engine develops 780 hp with mechanical supercharger. The engine is uprated to 1000 hp by replacing the supercharger with two Turbochargers and new Fuel injection equipment. For uprating any engine, the Cylinder Head is one of the most vulnerable member due to increased mechanical and thermal loadings. Mechanical loading is due to the gas pressure in the gas chamber and its magnitude can be judged in terms of peak pressure. Thermal loading is due to temperature and the heat transfer conditions in the piston surface, Cylinder Liner and the Cylinder Head.

In this uprating exercise, the additional mechanical loading is restricted by keeping the same peak pressure, while the additional thermal load is taken care of by supplementing the cooling effect. The uprated engine is V-60 in configuration and it has 12 Cylinders, turbocharged and after cooled.

1.1 THERMAL STRESSES INDUCED IN THE CYLINDER HEAD, LINER AND BLOCK

The thermal stresses in Cylinder Block, Liner and the Heads are induced mainly by three reasons [1]

- The temperature gradients under steady state operations, including the effects of cyclic temperature changes in the combustion chamber wall.
- An increase in the mean temperature of a component, which affects the expansion and distortion characteristics, thus inducing stresses.
- Thermal shock loading resulting from a sudden change in speed or load during transient, which change the rate of heat flux from the gas to Cylinder Head.

1.2 CYLINDER HEAD AND CYLINDER BLOCK OPERATING TEMPERATURES

Cylinder Head durability is clearly dependent on operating temperatures. Due to high temperature the flame plate tends to expand .The surrounding cooling portions of the Cylinder head, liner and Cylinder block act as constraint and give rise to compressive stresses

Downloaded from SAE International by Oak Ridge National Laboratory, Wednesday, November 06, 2013 01:44:36 PM

in the flame plate, liner and surrounding aluminum block. These stresses when acting over a period of time could give rise to compressive creep [2]. Fatigue damage will result when operating temperatures produce thermal stresses that exceed the yield strength of the material. For Aluminium castings a limiting temperature of about 500 K was reported in literature [3]. When this temperature exceeds, cylinder head material properties get detoriated and even within these temperature range variation in the material properties can influence the likelihood of cracking in the exhaust valve bridge and in the valve seat insert.

This report predicts the temperature distribution and the stresses that the Cylinder Head, Cylinder Block and the crankcase with Liner experiences in the up rated engine due to the higher pressure and temperature.

The major data required in thermal analysis is the thermal conductivity in case of conduction and heat transfer co–efficient in case of convection. Thermal conductivity is a material property that can be easily measured using experimental methods. Whereas, heat transfer co–efficient is not a material property and it depends on a number of factors such as the material conductivity, velocity of the fluid, temperature of the fluid, turbulence, surface finish etc. These complications have made it difficult to find out the value of heat transfer co–efficient by experimental methods.

2.0 SOLID MODELING OF THE CYLINDER HEAD, CYLINDER BLOCK AND CRANK CASE WITH THE LINER ASSEMBLY

The solid model of the Cylinder Head, Block with Liner were prepared by Pro/E. Small holes that do not have any functional significance in the load bearing capacity of the Cylinder Head have been removed. After creating these solid models, assembly of these models has been created. It was decided to model a single throw comprising Cylinder Block with Liner and Cylinder Head. Figure 1 shows the solid model of the Cylinder Head, Cylinder Block and crankcase with Liner for a single throw. A steel ring gasket which acts as a sealing between Head and Block has also been modeled in the assembly.

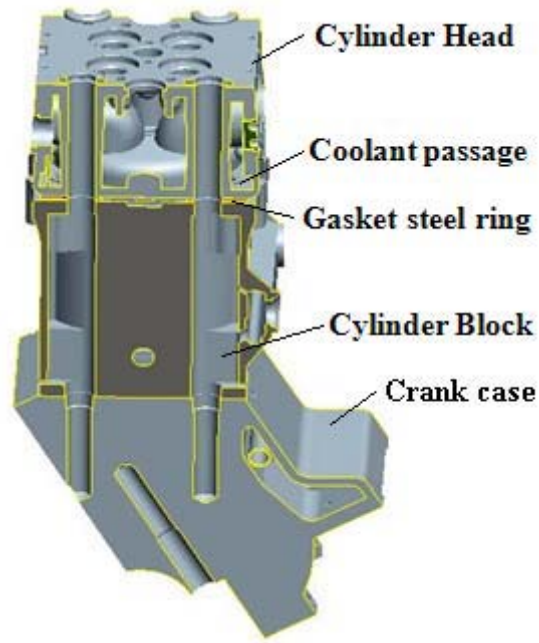

Figure 1 Solid model of single Cylinder Head cylinder Block and crankcase assembly

3.0 FINITE ELEMENT MODELLING FOR THERMOMECHANICAL ANALYSIS

It is intended to do a sequential coupled field analysis in order to realize the cumulative effect of thermal and mechanical loads.

A coupled field analysis is one in which the heat transfer analysis is first done to obtain the temperature distribution. Subsequently this result is given as the input for the structural analysis carried out. The stresses thus obtained would indicate the cumulative effect of thermal and mechanical stresses. The Cylinder Head is modeled with tetrahedral higher order solid finite elements (TET10). DC3D10 element formulation of ABAQUS has been used for heat transfer analysis & C3D10 has been used for stress analysis. The finite element model has been done with SIMLAB, a finite element meshing software.The finite element model is as shown in Figure 2 .

Downloaded from SAE International by Oak Ridge National Laboratory, Wednesday, November 06, 2013 01:44:36 PM

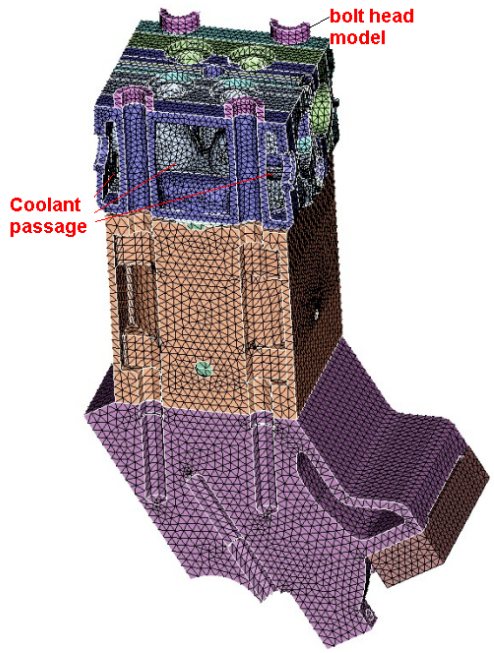

Figure 2 Finite Element model of single Head, block and crankcase assembly

3.1 THERMAL ANALYSIS

In the first step of the coupled field analysis, Heat transfer analysis was performed. Even though the process taking place inside the cylinder is highly transient in nature, a steady state Finite element analysis was sufficient to assess the structural durability of the cylinder head design [4].

3.1.1 Penetration depth

The heat transfer from the hot combustion gases includes forced convection through the hot gas boundary layer, conduction through the cylinder wall, and forced convection (including boiling) into the fluid coolant in the heat, engine block, and the piston. There is a small (about 5%) radiative component of heat transfer from the gases to the cylinder walls.

The heat transfer process is periodic due to the piston motion. However, the engine speed is usually high enough so that the temperature fluctuations only penetrate about a millimeter into the cylinder walls [5].

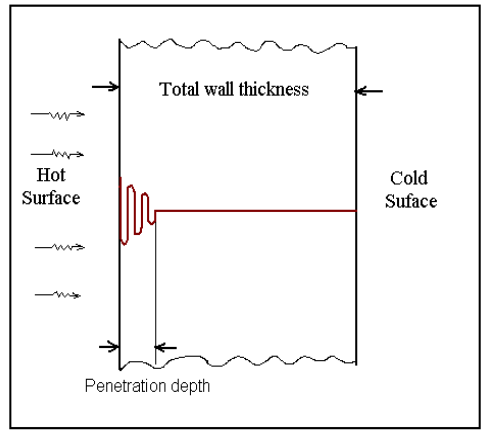

Figure. 3 Penetration depth

The unsteady heat conduction equation to examine the effect of periodic combustion on the temperature profile, in the cylinder wall is,

$$(\bullet T/\bullet t) = a(\bullet^2 T/\bullet X^2)$$

where T is temperature (^{0}C), t is time (s), X is distance (m), and a is thermal diffusivity (m^2/s). Scale analysis of the above equation gives an approximate relation for the penetration depth X.

$$X \cong (at)^{1/2}$$

An engine speed of 2000 rpm (209 rad/s), has a time scale of t

$$t = 2pi/o = (2pi/209) = 0.03 \text{ s}$$

The thermal diffusivity of Aluminum alloy used in this component is about $= 7.4 * 10^{-5}$ (m^2/s).

So the penetration depth is approximately

$$X \cong (at)^{1/2} = [(7.4 \times 10^{-5})\ (0.03)]^{1/2} = 1.49 \text{ mm}$$

Since the penetration depth is very small fraction of cylinder wall thickness, the cylinder wall can be assumed to have a temperature profile that is not changing in time (Ref. Figure. 3). Hence a steady state thermal analysis is performed.

4.0 HEAT TRANSFER ANALYSIS

Heat transfer coefficients at the water jackets were obtained from a CFD analysis and used to perform / carry out the heat transfer analysis.

Figure 4 shows the location and the surfaces for the thermal boundary conditions in the cylinder head. Table 1 shows clearly the amount of film coefficient with the bulk mean temperature of the fluid in the respective places.

Downloaded from SAE International by Oak Ridge National Laboratory, Wednesday, November 06, 2013 01:44:36 PM

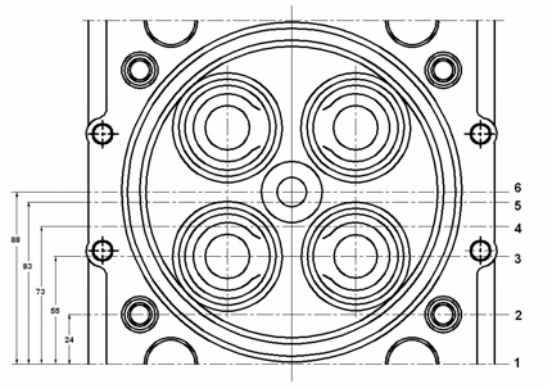

Figure 4 Thermal boundary conditions for the coolant and its location in the cylinder head

Table 1. Thermal boundary conditions for the coolant and its location in the cylinder head

Sr. No.	Section description **Figure 4**	Coolant temperature K	Convective heat transfer co-efficient of the coolant, h, W/m^2 K
1	1 -2 (stud center)	381.57 / 384.97	8795
2	2 - 3 (coolant entry to head hole center)	382.25 / 384.41	4267
3	3 - 4 (valve center)	382.70 / 383.70	26263
4	4 - 5 (nozzle entry)	382.93 / 383.38	49930
5	5 - 6 (nozzle center)	383.04 / 383.16	13169

Similarly other thermal boundary conditions have been applied for the exhaust gas, inlet air and combustion gas in the respective surfaces. Figure 5 shows the thermal boundary conditions of coolant, inlet air, exhaust gas and combustion gas in the Cylinder Head.

Figure 5 Thermal boundary condition in the Cylinder Head

Figure 6 shows the sectional view of cooling jacket in cylinder block . The thermal boundary condition for the coolant has been applied as shown in table 2. And table 3 shows the heat transfer coefficient of the exhaust gas with the temperature on the liner side.

Table 2 convective heat transfer coefficient for the coolant flowing inside the jacket

Section location	Section description	Average temperature in that area ^{0}**C**	Convective heat transfer co-efficient of coolant, h W/m^2 K
A	Coolant entry passage	105	74257
B1	Flow area (bottom)	The temperature varies as shown in the section drawing. **Figure 6**	3000
B2	Annular passage		8323
B3	Flow area (top)		2893
C	Entry to head		24484
D	Cross flow passage	106	4190

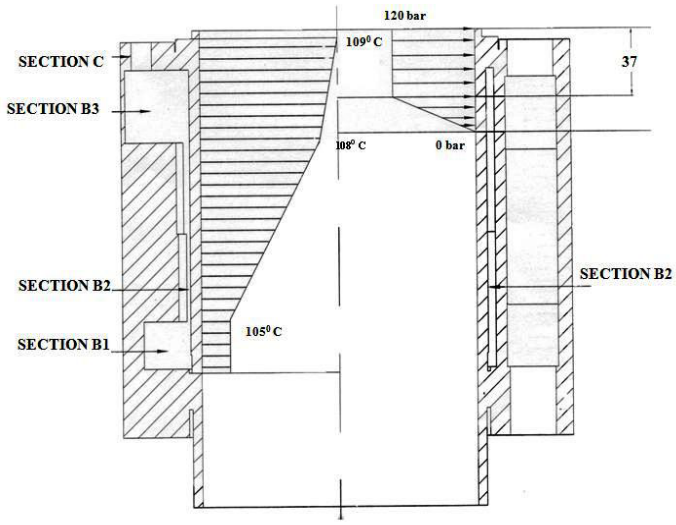

Figure 6 Section detail of cooling jacket in Cylinder Block indicating the variation of average coolant temperature and gas pressure

Downloaded from SAE International by Oak Ridge National Laboratory, Wednesday, November 06, 2013 01:44:36 PM

Table 3: Film coefficient with bulk mean temperature of the exhaust gas on the Liner side

Exhaust gas film coeifficient,h (W/m^2K)	temperature (K)	Distance from TDC,X^{tdc} (mm)
961.50	939.54	3.20
742.12	900.67	7.00
665.46	852.33	11.53
602.89	814.94	16.92
550.60	784.04	23.32
505.83	758.17	30.89
465.99	735.95	39.82
429.09	717.01	50.30
390.73	701.98	62.53
354.02	688.26	76.75
317.12	676.64	93.09
277.08	667.24	111.70
232.33	659.79	132.52
178.03	655.11	155.42
73.56	625.76	180.00

Figure 7 The thermal boundary condition of coolant and the combustion gas outside and inside the Liner, respectively.

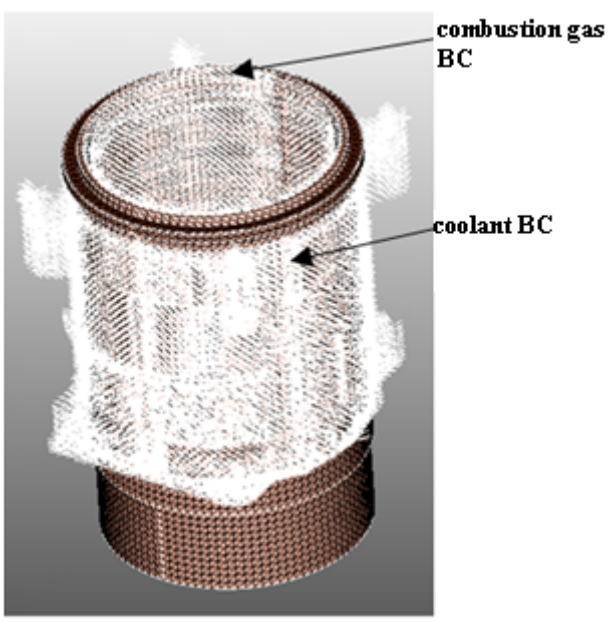

Figure 7 The thermal boundary condition of coolant around the Liner and the combustion gas inside the Liner

Table 4 shows the mechanical properties of the materials used in this analysis. After applying all the thermal BCs, the Steady State heat transfer analysis has been carried out using Finite element analysis tool, ABAQUS. In ABAQUS, DC3D10 element is used for this analysis. The estimated temperature distribution has been shown in the Figures 8 to 11.

Table 4 Material properties

Mat	Thermal conductivity,W/ mK	Density kg / m^3	Young's modulus N / mm^2	Poisson's ratio	Co-efficient of Thermal expansion
St	30	7850	$2.1x10^5$	0.3	$1.3x10^{-5}$
Al	200	2800	$0.74x10^5$	0.3	$2.2x10^{-5}$

The max temperature in the Liner near the top dead center (steel) is 570K. It can be noted that this value is comparable with the value obtained from the input details given in table 3. However at Xtdc = 180mm, the temperature as predicted by Finite Element Analysis is lower bound. The temperature distribution in Cylinder Block (aluminum) and Cylinder Head (aluminum) are 454K and 483K respectively. As expected the inside portion of the Head in the exhaust valve region & valve bridge the temperature is in the order of 483K. And the temperature distribution in the crankcase is 409 K. This is less than the allowable value of about 500K which is the limiting temperature of Aluminum casting as reported in literature [3]

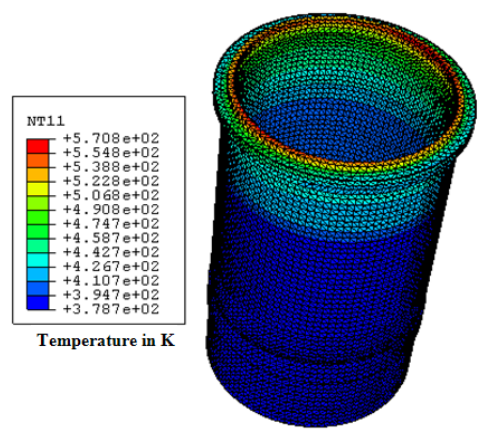

Figure 8 Temperature distribution in Liner (steel)

Downloaded from SAE International by Oak Ridge National Laboratory, Wednesday, November 06, 2013 01:44:36 PM

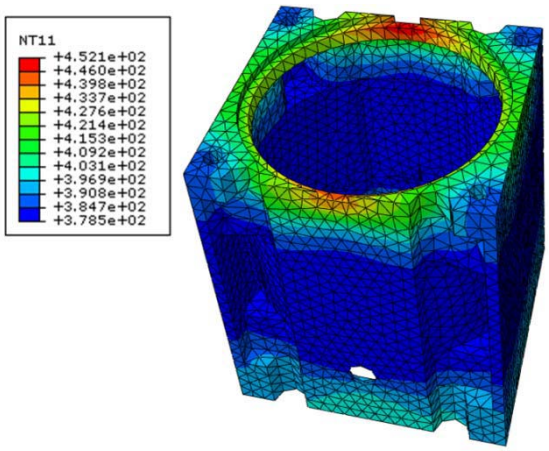

Figure 9 Temperature distribution in Cylinder Block

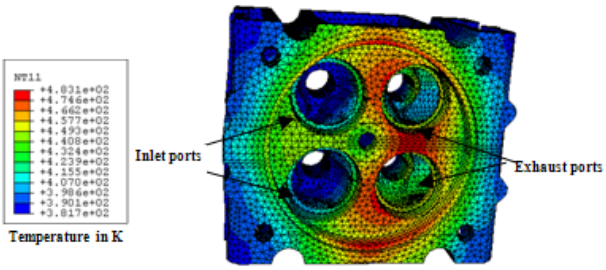

Figure 10 Temperature distribution in Cylinder Head

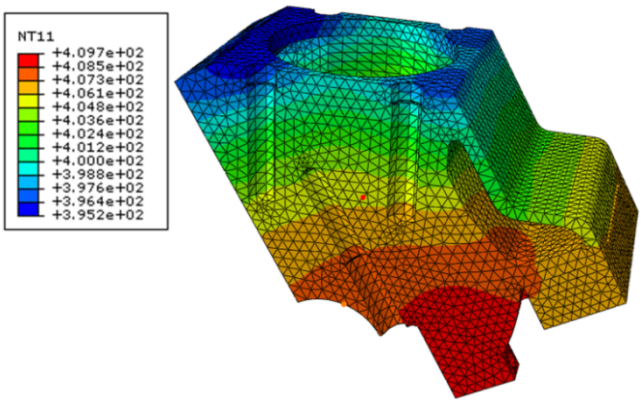

Figure 11 Temperature distribution in crankcase

5.0 FINITE ELEMENT THERMO MECHANICAL ANALYSIS

A coupled field analysis is one in which the thermal analysis is first done to obtain the temperature distribution. This result is given as the input for the structural analysis, carried out subsequently apart from the mechanical loads. Figure 12 shows FE model with the temperature input obtained from the previous heat transfer analysis. The stresses thus obtained would indicate the cumulative effect of thermal and mechanical stresses.

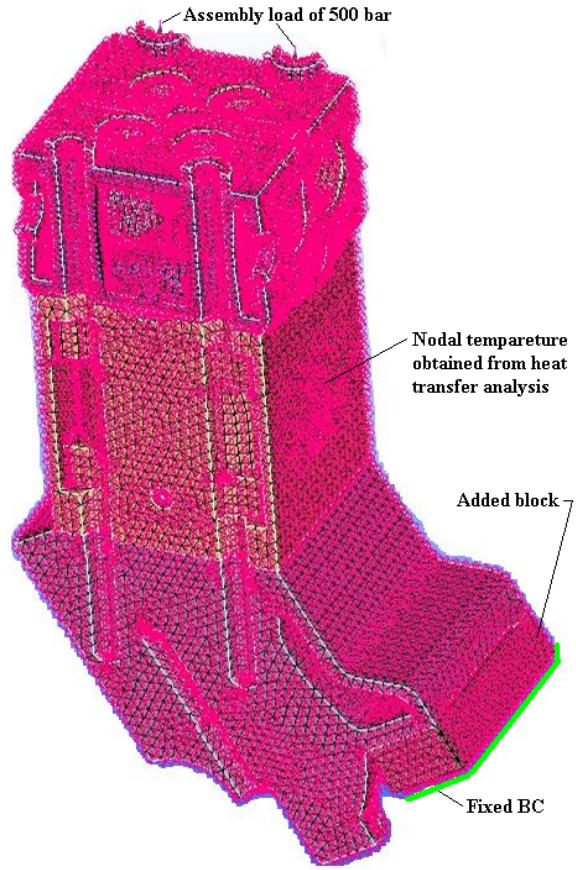

Figure 12. Finite Element model with temperature input

After performing heat transfer analysis the finite element model has been modified to carry out the thermal stress analysis. ABAQUS C3D10 element has been used for the analysis. In order to allow a thermal expansion, a small block in the bottom portion of the Crank case has been added and fixed BC has been applied and all other surfaces have been kept free. In the existing FE model structural boundary conditions have been created. Bolts have been modeled as beam elements (element type B31) which run through from Cylinder Block bottom to Cylinder Head top. Assembly load of 500bar has been applied in all the bolt heads. A combustion pressure of 120bar has been applied, and the temperature input from the heat transfer study has applied to the model. The top face of the bolt heads are modeled as rigid links and the temperature distribution due to heat transfer analysis have been applied as 394K and 378K in the top and bottom face of the bolt head respectively. And also an initial temperature of 305K has been applied all over the surface of the model. The Static structural analysis with the thermal influence has been carried out.

It is observed that the Von-Mises stress levels were within the allowable limits for all the parts of Cylinder Block, Liner except the crankcase. Ignoring the peak localized stresses at the area where boundary conditions were applied, the maximum Von-Mises stress in the crankcase is 265N/mm^2. And in the Cylinder head the

Downloaded from SAE International by Oak Ridge National Laboratory, Wednesday, November 06, 2013 01:44:36 PM

maximum Von-Mises stress is 256N/mm^2. While in the steel Liner is 327N/mm^2. Figures 13 to 16 show the stress distribution of Cylinder Head, block and Liner.

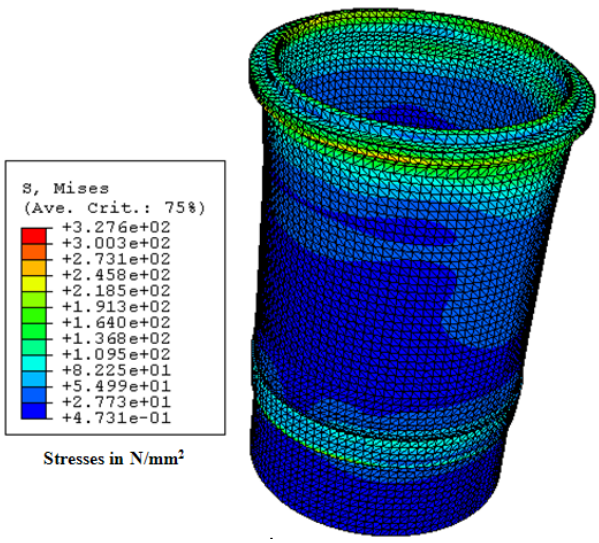

Figure 13 Stress distribution due to static & thermal load in Liner (steel)

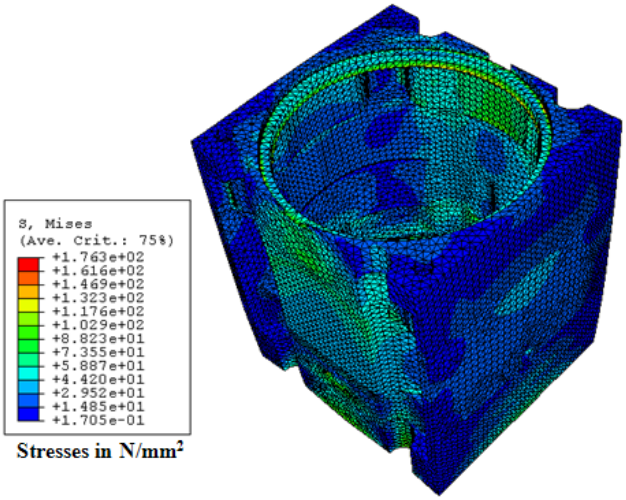

Figure 14 Stress distribution due to static & thermal load in Cylinder Block

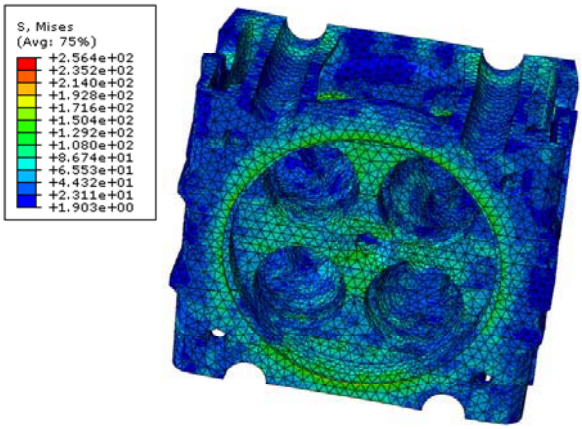

Figure 15 Stress distribution due to static & thermal load in cylinder Head

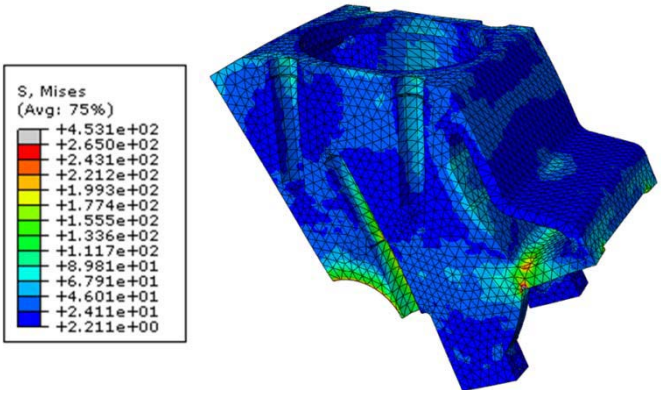

Figure 16 Stress distribution due to static & thermal load in crankcase

6.0 FATIGUE STRENGTH VERIFICATION

The theory used to verify the fatigue strength of the component is based on the high cycle fatigue, shall resist upto 2.40*10^7 cycles. This number of cycles was determined considering an expected durability of 400 hrs endurance test conducted at a rated speed of 2000rpm and load factor of 30%. the fatigue strength can be found out from S-N curve for 2012-T6 aluminum alloy for 2.40*10^7 no of cycles, the endurance limit of aluminum is arrived as 186 MPa. And from the finite element analysis maximum principal stress are estimated for the two cases. Figure 17 shows the contour of the maximum principal stress, when it is considered only with the peak fire pressure of 135 bar.

Downloaded from SAE International by Oak Ridge National Laboratory, Wednesday, November 06, 2013 01:44:36 PM

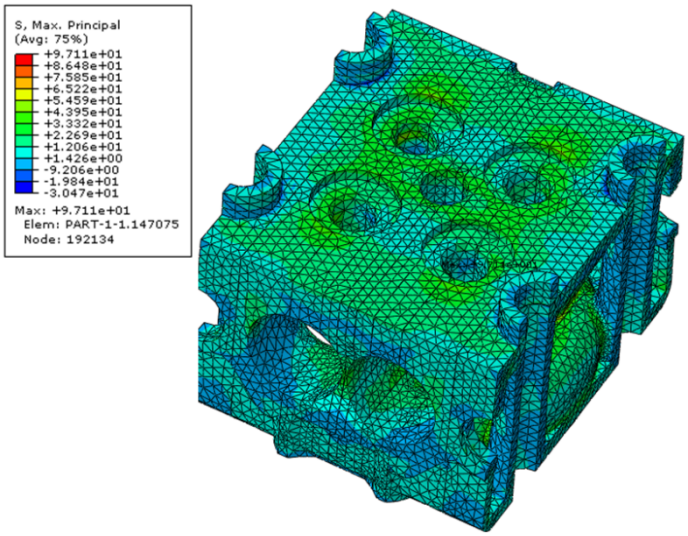

Figure 17 Maximum principal Stress distribution due to peak fire pressure of 135 bar

Figure 18 shows the contour of the maximum principal stress, when it is considered with the peak fire pressure and thermal influence from the existing heat transfer analysis.

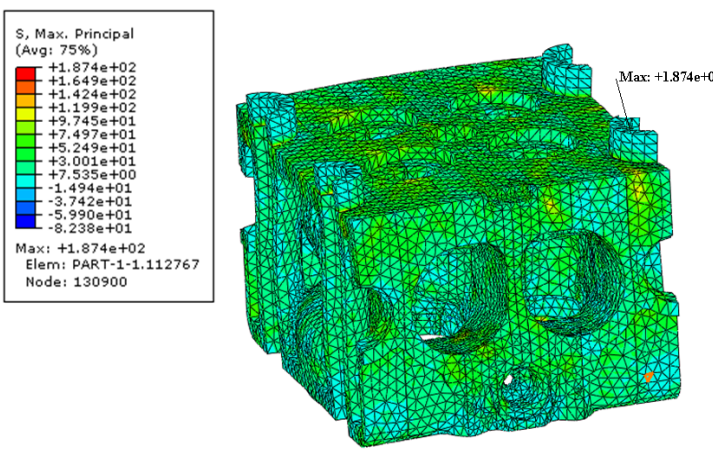

Figure 18 Maximum principal Stress distribution due to peak fire pressure and thermal influence

The alternating stress σ_a and the mean stress σ_m can be found out by the following calculation,

$$\sigma_a = \frac{187.4 - (187.4 - 97.11)}{2} = 48.56MPa$$

$$\sigma_m = \frac{187.4 + 187.4 - 97.11}{2} = 138.35MPa$$

As per Soderberg equation

$$\frac{1}{n} = \frac{\sigma_m}{\sigma_y} + \frac{\sigma_a}{\sigma_{-1}}$$

where σ_m = the mean stress= 138.35 MPa

σ_y =the yield stress= 286 MPa

σ_a =the alternating stress= 48.56 MPa

σ_{-1}= the endurance stress= 186 MPa

$$\frac{1}{n} = \frac{138.35}{286} + \frac{48.56}{186} = 0.74$$

And finally, the fatigue safety factor

n=1.35

The minimum safety factor of the component shall be higher than 1.09 to achieve the specified engine life.

7.0 RESULTS & CONCLUSION

a. This study has been carried out for the purpose of finding the thermal stresses developed when the power of the existing engine has been increased from 780 hp to 1000 hp. The Cylinder Head, Cylinder Block with Liner of the uprated Engine has been modeled using finite element method and coupled steady state heat transfer cum thermal stress analysis has been done.

b. The basic approach adopted in the coupled thermomechanical analysis is that, first steady state heat transfer analysis has been carried out, and then structural analysis has been carried out taking the temperature distributions obtained from the heat transfer analysis .

c. Based on the literature survey, it has been noted that the depth of penetration of the heat due to transient heat input is only 1.49mm and hence, a steady state analysis would be sufficient to predict the temperature distribution.

d. From the detailed heat transfer analysis,it can be noted that the peak temperature in the Liner is 570K while in the Cylinder Head on the exhaust side and Cylinder Block are 483K & 454K, respectively.

Downloaded from SAE International by Oak Ridge National Laboratory, Wednesday, November 06, 2013 01:44:36 PM

e. The present thermal stress analysis study concentrates on the peak conditions such as peak firing pressure in addition to steady state thermal conditions. This study shows that the stress levels are within the permissible limit for Cylinder Block with Liner except the Cylinder Head. Even in the Cylinder Head the stress level does not exceed 250N/mm^2, which occurs at mounting stud location. The permissible stress for the material of the Cylinder head (Aluminium alloy) is 286N/mm^2.[6] It can be noted that the Von-Mises stress levels are between 27 and 327N/mm^2 for liner & 14 and 176 N/mm^2 and between 39 and 265N/mm^2 for Cylinder Block and crankcase respectively.

f. The study predicts as such there is no design change is required as for as Cylinder head ,Cylinder block, crankcase and liner. And it is also observed from the successful completion of 400hrs Endurance test and performance evaluation of the Engine in the Engine test bed and also when it is integrated in the vehicle.

g. Fatigue strength verification has been carried out and estimated the fatigue safety factor as 1.35.

h. As a further development, the same model can be used for carrying out a non – linear structural analysis by feeding the P - θ diagram of the engine. Also thermal analysis at transient state can be carried out on the basis of experimental results.

REFERENCES

1 K. S. Lee, D. N. Assasins, Jinho Lee and K.M.Chun "Measurements and predictions of steady state and transient stress distributions in a diesel engine Cylinder Head" SAE paper 1999-01-0973.

2. J. J. Biech "Heat transfer and stress analyses of engine head and evaluation of methods of preventing head crack" SAE paper 8205.

3. R. Betrodo and T. J. Carter "Stress analysis of diesel engine Cylinder Heads" J. of Strain analysis, 6,1, pp, 1-12,197.

4. K. D. Vertin, C. L. Huller and T. S. Lubnow Jr "A root cause investigation of Cylinder Head cracking in large diesel engine standby power generators" SAE paper 950518.

5. Cylinder Heat Transfer Process from Internet http//succ.Shirazu.ac.ir/~motor/page6.htm

6 Alexandre Schalch Mendes and Ademar de Azevedo Cardoso "Structural Analysis of the Aluminum Cylinder head for a High speed Diesel Engine" SAE paper 2007-01-2562.

7 PSG design data

The Asia Pacific Automotive Engineering Conference (APAC) Technical Paper Review Committee, under the leadership of SAE INDIA, has approved this paper for publication. It has successfully completed SAE's peer review process under the supervision of the APAC Technical Paper Review Committee. This process requires a minimum of three (3) reviews by industry experts.

All rights reserved. No part of this publication may be reproduced, stored in a retrieval system, or transmitted, in any form or by any means, electronic, mechanical, photocopying, recording, or otherwise, without the prior written permission of SAE.

ISSN 0148-7191

Positions and opinions advanced in this paper are those of the author(s) and not necessarily those of SAE. The author is solely responsible for the content of the paper.

SAE Customer Service:
Tel: 877-606-7323 (inside USA and Canada)
Tel: 724-776-4970 (outside USA)
Fax: 724-776-0790
Email: CustomerService@sae.org
SAE Web Address: http://www.sae.org
Printed in USA